ES-08FDS
MS-08FS
MF-08FS

Electric & Manual Hospital Bed

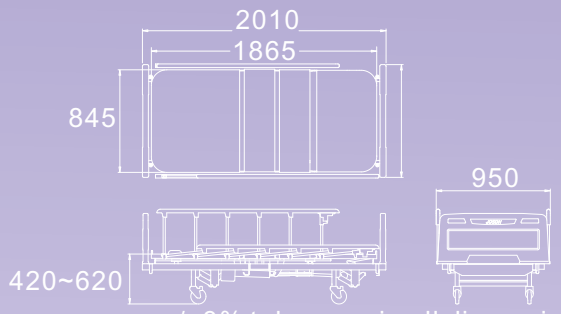

+/- 3% tolerance in all dimensions

Remote Controller

Allowing control of back, knee, Hi-Lo & auto-contour functions.

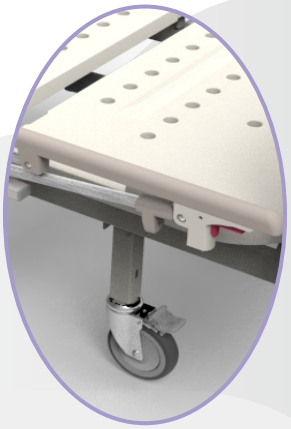

Option-Fixed height

Collapsible Cranks, for manually operating back, knee & Hi-Lo functions.

5" Dust-Proof Lockable Castor.

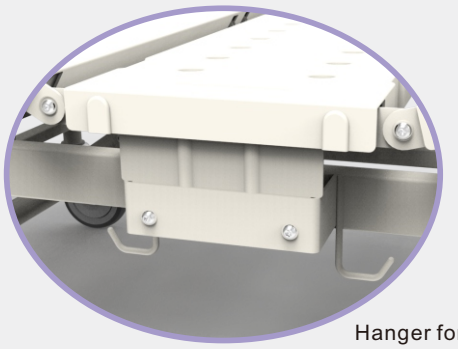

Hanger for drainage bag.